Question 3

This question relates to the Home Experiment in Unit 9, and carries 45% of the marks for this assignment.

To answer this question, you will need to use the conducting paper supplied for Measurement 4 (Unit 9, Section 3). The Course Team recommends that you tackle this question immediately after completing Measurement 4. If you have to put the kit away before tackling this question, leave the wires sellotaped to the conducting paper so that you do not damage the silvered regions.

As well as testing your understanding of Units 8 and 9, this question tests your ability to make experimental measurements and to analyse data. If, at any stage in the experiment, it proves impossible to make the required measurements, discuss the results that you believe you would have obtained if you had been successful. Also, explain the cause of your difficulties. A clear account, together with a correct analysis, can earn you up to three-quarters of the total marks for this question.

Set up the apparatus for measurement 4 (Section 3, Unit 9), and adjust the power output so that the potential difference between the two silver strips is about 5 V.

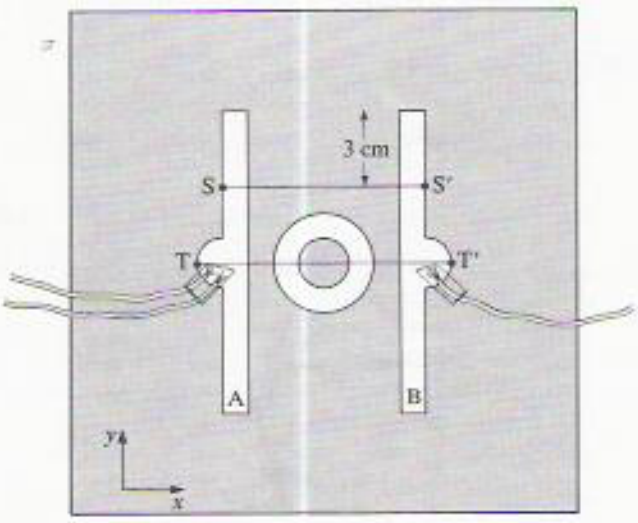

FIGURE 2 For use with Question 3.

(a) Figure 2 shows a line SS′ that joins points on the outside edges of the electrodes. Measure the potential difference between S and a set of points along the line SS′. About a dozen suitably spaced measurements should be sufficient. Repeat the procedure, measuring the potential difference between T and points on the line TT′. You should include a *table* of your measurements with your answer. Estimate the uncertainties in your measurements of potential difference and position. Then plot *graphs* of potential difference versus position for each of the two lines, and use error bars to indicate the uncertainties in your results. Indicate the positions of the silvered regions on your graphs. *(16 marks)*

(b) State clearly in mathematical symbols the relationships between each of the *three* components of the electric field and the electric potential. Briefly explain how the x-component $\mathscr{E}_x$ of the electric field at points on the lines SS′ and TT′ is related to the graphs you drew for part (a). *(5 marks)*

(c) From your potential difference graphs, derive how $\mathscr{E}_x$ varies along the lines SS′ and TT′. Sketch $\mathscr{E}_x$ versus x graphs to show the variation along each line. Your sketches should show clearly the positions of the silvered regions, but you do not need to calculate values for the electric field component in this part of the question. *Explain*, in a few sentences, the major features of your sketches. *(15 marks)*

(d) Use your results from part (a) to determine the x-component of the electric field midway between S and S′. Estimate the uncertainty in this result. *(4 marks)*

(e) Sketch again your graph $\mathscr{E}_x$ versus x for the line SS′, and superimpose on it a sketch of the x-component of force F_x felt by an electron at points on the line SS′. Comment very briefly on the relationship between the two graphs. *(5 marks)*

Question 4

This question is related to Unit 9 and carries 20% of the marks for this assignment.

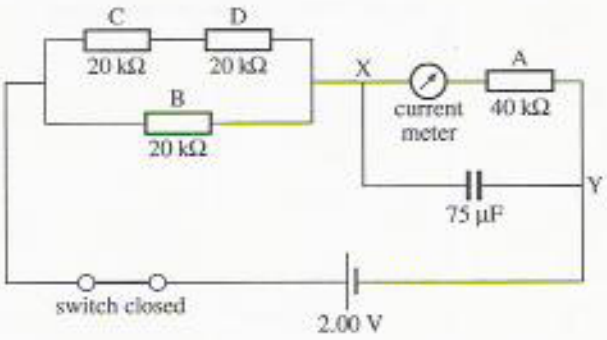

FIGURE 3

Figure 3 contains a circuit that can be simplified considerably by replacing some of the series and parallel resistors by a single effective resistance.

(a) Assuming that the internal resistances of the battery and the current meter are negligible, what is the current recorded by the meter in the steady state? *(5 marks)*

(b) What power is dissipated in resistor B in the steady state? *(4 marks)*

(c) What charge is stored by the capacitor in the steady state? *(4 marks)*

(d) If, when the circuit is in a steady state, the switch is opened, what current would the meter record 10.0 seconds after the moment of opening? *(7 marks)*

2.0 2.9 3.3 3.6 4.2 5 5 5

SS′	0.0	0.5	1.0	1.5	2	2.5	3	3.5	4	4.5	5	5.5	6	6.5	7	7.5	8				
	0	0	0	0.4	0.9	1.4	1.6	2.1	2.3	2.3	5.4	4.5	5.5								
TT′	10.0	0.5	1.0	1.5	2	2.5	3	3.5	4	4.5	5	5.5	6	6.5	7	7.5	8	8.5	9	9.5	10
	0	0	0	0	0	1.3	2.2	2.5	2.5	2.5	2.5	2.5	2.5	2.5	2.5	3.5	5	5	5	5	5
SS′	0.0	0.5	1.0	1.5	2	2.5	3	3.5	4	4.5	5	5.5	6	6.5	7	7.5	8				
	0	0	0	0.5	1	1.4	1.7	2	2.4	2.7	3	3.4	3.8	4.5	5	5	5				