Objectives

To prepare cyclohexene from cyclohexanol from cyclohexanol by an elimination method and to test for unsaturation in product.
To introduce the method of purification for an organic liquid.

Introduction

The acid-catalyzed dehydration of an alcohol is an important method for the preparation of an alkene. It is also an example of an elimination reaction, which proceeds by a first order mechanism via an intermediate carbocation.
In this experiment, cyclohexanol is dehydrated to cyclohexene n the presence of concentrated phosphoric acid:

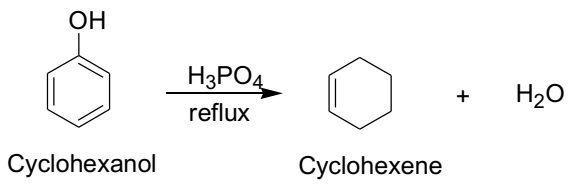

Distillation is employed in this experiment to synthesize and purify cyclohexene. The principle of distillation as a separation method is based on the difference in boiling points of substances. The identity and purity of the product can be checked by infrared spectroscopy and gas chromatography.

Apparatus

Conical flask x 3	**250cm^3 beaker x 1**
50cm^3 pear-shaped flask x 1	**Spatula x 1**
Filter funnel x 1	**150□ thermometer x 1**
Oil bath x 1	**Test tubes x 2**
Hot plate x 1	**Screw cap adaptor x 1**
Condenser x 1	**Ice bath x 1**
Still head x 1	**Aluminium foil x 1 piece**
Filter paper x 1	**Dropper x 1**
Stir bar x 1	**Measuring cylinders x 3**
Stand x 1	**Clamp x 1**

Reagents

Cyclohexanol, Saturated sodium chloride solution, anhydrous sodium sulphate, Bromine in chloroform, dilute alkaline potassium permanganate (VII) solution & Acetone.

Procedure

A. Apparatus set up

1. **The still head was connected with a condenser.**
2. **This still head was connected with a screw cap with a 150□ thermometer whose still head was located at the mouth of the condenser.**
3. **The junction between the still head and the condenser was wrapped up in a piece of aluminum foil.**
4. **This whole setup was clamped.**
5. **2 rubber tubes were connected to condenser's water in (near the head) and the water out (near the tip).**
6. **Finally a clean & dry conical flask (put in the ice bath) was placed to near the tip of the condenser to collect the distillate.**

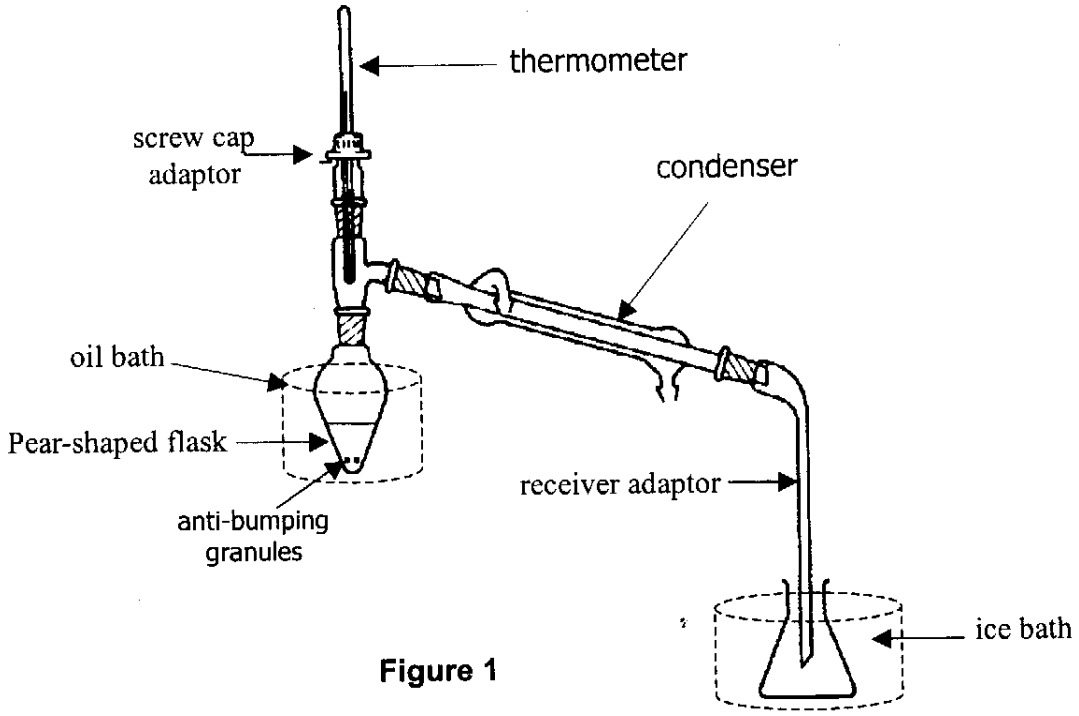

Figure 1

B. Preparation of the reagents

1. **15 cm^3 of cyclohexanol was added in to a 50cm^3 pear-shaped flask by using measuring cylinder.**
2. **4.0cm^3 of 85% phosphoric acid was added into flask gently.**
3. **Then the flask was swirled to mix the content.**
4. **After that a stir bar was dropped in the flask too.**
5. **The flask was fit with the factional column.**
6. **Finally, the flask was completely immersed into the oil bath, which was placed on the hot plate.**

C. Fractional distillation

1. **Firstly, the water tap was opened to let water into the condenser.**
2. **The mixture was refluxed until the thermometer showing 80-90□(not higher than 90□) to collect the distillate for about half an hour.**
3. **When the distillate stopped to come out, the hot plate was turned up to 200-250□(but the temperature shown in the thermometer must not higher than 90□) until no more distillate came out.**

D. Separation of cyclohexene

1. **After distillation, 4cm^3 of saturated sodium chloride solution was added to distillate**
2. **The mixture was swirled**
3. **a dry and clean conical flask was weighed and added with 1g of anhydrous sodium sulphate**
4. **Then the upper layer of the mixture was drawn off and placed into a this conical flask**
5. **The organic layer was also swirled**
6. **After that, this layer was filtrated by using filter paper and funnel to remove the used sodium sulphate**
7. **At the end of the separation, the dry organic extract (cyclohexene) was weighed again.**

E. Test for the product

1. **The 5 drops of dry organic extract was added into 2 test tubes separately and evenly.**
2. **A few drops of bromine in chloroform and dilute potassium permanganate (VII) solution were added respectively.**

Data

Mass of conical flask with extracted dry cyclohexene	**46.62g**
Mass of dry empty conical flask	**42.16 g**
The mass of the extracted dry cyclohexene	**4.46 g**

Results

For the reaction between bromine in chloroform (CHCL3) and cyclohexene, the observation was a depolarization of bromine, from the reddish bromine to colorize.

For the reaction between dilute alkaline potassium permanganate (VII) solutions, the observation was the solution change from purple color to brow color.

Questions & Answers

1. **Write equations to show the mechanism of dehydration of cyclohexanol by concentrated phosphoric (V) acid?**

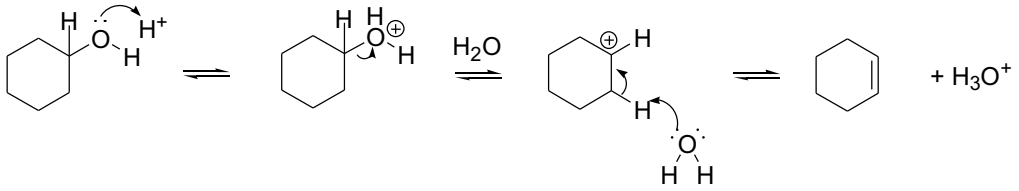

2. **Write equations for an alternative route for converting cyclohexanol to cyclohexene via bromocyclohexane.**

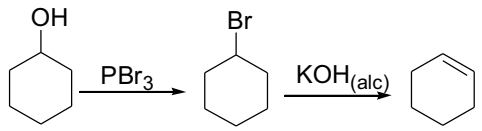

3. **Before we heat the mixture of cyclohexanol and phosphoric (V) acid in the pear shaped flask, why do we have to add a few chips of pumice stone into the flask?**

   As the few chips of pumice stone added into the flask are act as anti pumping granules to prevent over heat and vigorous reaction.

4. **Why the temperature of the still head should not exceed 90 degree in this experiment?**

   As if the product received over 90 degree is the other product, like the water or acid vapours, not the cyclohexene.

5. **What is the function of sodium chloride and anhydrous sodium sulphate in this experiment?**

   Sodium chloride is used to neutralize the acid and the sodium sulphate is used to absorb the moisture.
   Saturated sodium chloride solution is used for extracting water from the cyclohexene. Saturated sodium chloride is lower water potential solution so water in the organic layer can diffuse to the saturated salt solution. As the result, almost none of water can dissolve in the cyclohexene so we can extract out the all-high purity synthesized cyclohexene. This is a separation called solvent extraction or salting out.
   Since the anhydrous sodium sulphate is a very good dehydrating agent, it is used to remove the water in the mixture with cyclohexene. As we add excess amount of anhydrous sodium sulphate into the mixture, the water can be absorbed by it and the remains are the cyclohexene and the rest of the anhydrous sodium sulphate solid. After filtration, the remained dehydrating agent can be filtered out so the dry organic cyclohexene can be obtaine

6. What is the percentage yield of cyclohexene in your experiment?

The mass of the extracted dry cyclohexene

= (Mass of conical flask with extracted dry cyclohexene - mass of dry empty conical flask)

= 46.62 -42.16

= 4.46 g

No. Of moles of extracted dry cyclohexene

= Mass / molar mass

= 4.46 / [(1.008) (10) + (12.01) (6)]

= 0.0543

Density of cyclohexanol

= Mass/volume

So, the mass = Density x volume

= 0.948 x 15

= 14.22g

No of moles of used cyclohexanol

= Mass / molar mass

= 14.22/ [(12.01) (6) + (1.008) (12) +16.00]

= 0.142

The percentage yield

= (No. of moles of extracted dry cyclohexene/ no of moles of used cyclohexanol) x 100%

= (0.0543/0.142) x 100%

= 38.24%

7. Describe, with the use of equations, the reaction of the product (cyclohexene) with BR2 and alkaline KmnO4. What is/are the significance of these reactions?

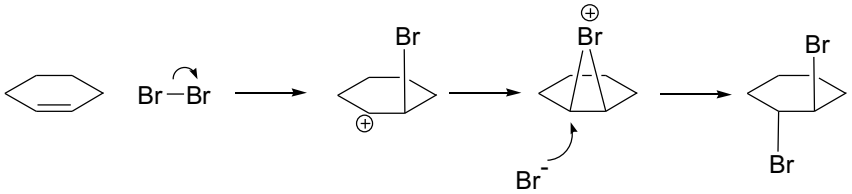

In the test between cyclohexene and bromine in chloroform, the brown solution is decolorized. The cyclohexene is an unsaturated hydrocarbon, the π-electrons attacks a bromine atom in a bromine molecule to carry out a heterolytic cleavage that yields the cyclic bromonium ion. At the intermediate stage, a carbocation is attacked by the bromide ion to form the *trans*-1,2-dibromocyclohexane. The depolarization of bromine in chloroform is by breaking the bromine molecule.

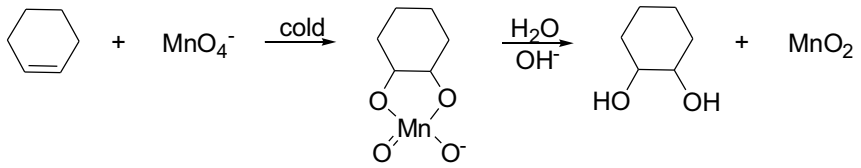

The above reaction is dihydroxylation.

Cyclohexene is oxidized by potassium permanganate to form *cis*-1,2-cyclohexanediol. 2Two oxygen atoms of the permanganate ion bond to 2 carbon atoms, which doubly bond together, then the bonding between these oxygen atoms and the manganese atom are then broken. After a several steps cleavage, the permanganate (VII) ion is reduced to manganese (IV) oxide and the cyclohexene is oxidized so that the original purple color change to brown color. The diol synthesized can then be transformed to carboxylic acid, ketone or aldehyde according to the applied conditions. It depends on the temperature and the structure (substituent) of the cyclohexene. For example, cyclohexene can be oxidized by hot potassium permanganate to form hexadioic acid, which is a method to synthesize carboxydioic acid.

Discussion

- **The reaction of changing the cyclohexanol to cyclohexene is EN1 or EN2 reaction mechanism. Due to the higher steric effect, the lower favorable to proceed EN2 reaction, so it proceed SN1 reaction mechanism.**
- **The method to get high % yield of cyclohexene is showed below.**

  The layer of crude cyclohexene could be further purified by washing the layer of cyclohexene with dilute sodium hydrogencarbonate solution so as to remove any residual acid (H3PO4). Discard the lower aqueous layer in a separating funnel.

  The layer of cyclohexene has now become cloudy with water droplets inside. Shake this cloudy product with anhydrous magnesium sulphate (VI) to remove the moisture- this may take some time.

After standing for sometime separate the clean, colorless liquid from the solid drying agent and distil the product again, this time collecting the fraction boiling at 81-83degree.

- **The thermometer should adjust the bulb level with the side arm of the distilling flask. The temperature at which either has been distilled off. If the thermometer bulb is pushed too low of the position as indicated, it cannot register the temperature of the vapour coming out.**
- **Addition reaction is that two substances react to form a single substance. A double or triple bond is usually found in one of the reactants.**
- **Elimination reaction is a reaction involving the removal of atoms or groups of atoms from two adjacent atoms (usually carbon atoms) of the bond between the carbon atoms. It is reverse of addition reaction.**

Precaution & Improvement

1. **Wear safety spectacles.**
2. **Cyclohexene has an unpleasant odor, characteristic of volatile alkenes. Keep cyclohexene in the fume hood when using it.**
3. **Must dispose the organic wastes in the proper containers in the fume hood.**
4. **Cyclohexene and cyclohexanol are very flammable. Bromine is toxic and corrosive, especially in its state. Phosphoric (V) acid is highly corrosive. Therefore you must always stopper the bottles containing them, keep the bottles away from flame and handle them in the fume hood.**
5. **To increase the purity of the cyclohexene, the temperature of the reaction should not be too high in order to prevent from more water being distillated. To increase a little bit the reflux temperature not only can increase the purity of cyclohexene but also increase the reaction rate.**

   In this experiment, some cyclohexene lose during the extraction of the organic layer from the distillate. To prevent from the loss, we can distillate the product by keeping the temperature not higher than 83□ more than 3 times, because of near boiling point between water and cyclohexene. We boil the product not exceeding 83□ can extract higher purity of cyclohexene for the next step adding anhydrous sodium sulphate.
6. **It should be lubricating the glass joints evenly, using only a small amount of lubricant.**
7. **Clamp the apparatus at a suitable position, with the movable parts uppermost and firmly but not too tight.**

8. **Place the thermometer bulb in the correct position; adjust the position of the thermometer by unscrewing the adapter, sliding the thermometer through the ring and then retightening it.**
9. **Set up a water condenser by checking that the rubber tubing is of sufficient length, fitting the rubber tubing by lubricating with a little water, running water into the condenser from the lower end, and controlling the rate of flow of water so that the tubing is not disloged, and the rate is geared to the boiling point of the distillate.**
10. **Don't let the rubber too close to the heater. Otherwise, the rubber will be broken.**
11. **Check that the system is not a closed one, the joints are well fitted and the system is not tilted,**
12. **The anti-bumping granules are added when the liquid is cold.**

Conclusion

The cyclohexene can prepared from cyclohexanol by an elimination method and tested that it was unsaturated. Also the purification of the product by adding sodium chloride and anhydrous sodium sulphate is worked.